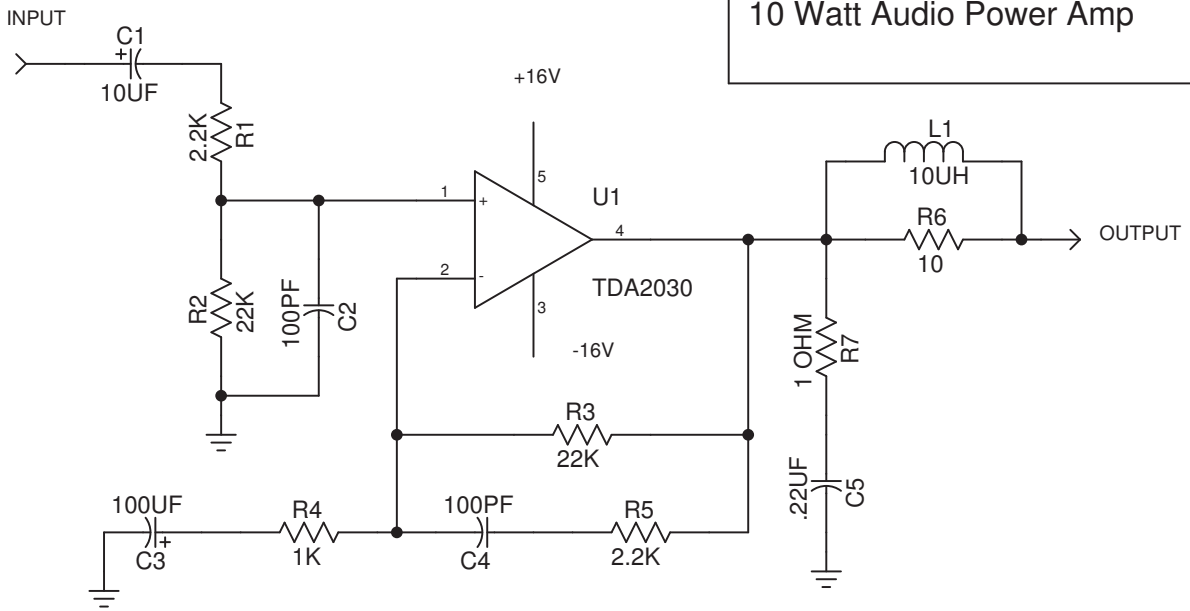

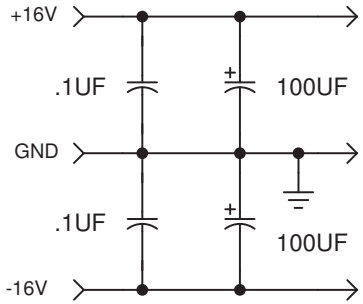

http://www.dibsplace.com/design/dcircats.html

Title	IC Audio Power Amp, #1		
	DIBs Electronic Design		
Date	Wed Sep 26 2007	Drawn by	DIB
Filename	PWRAMP01.S01	Sheet	1 of 1