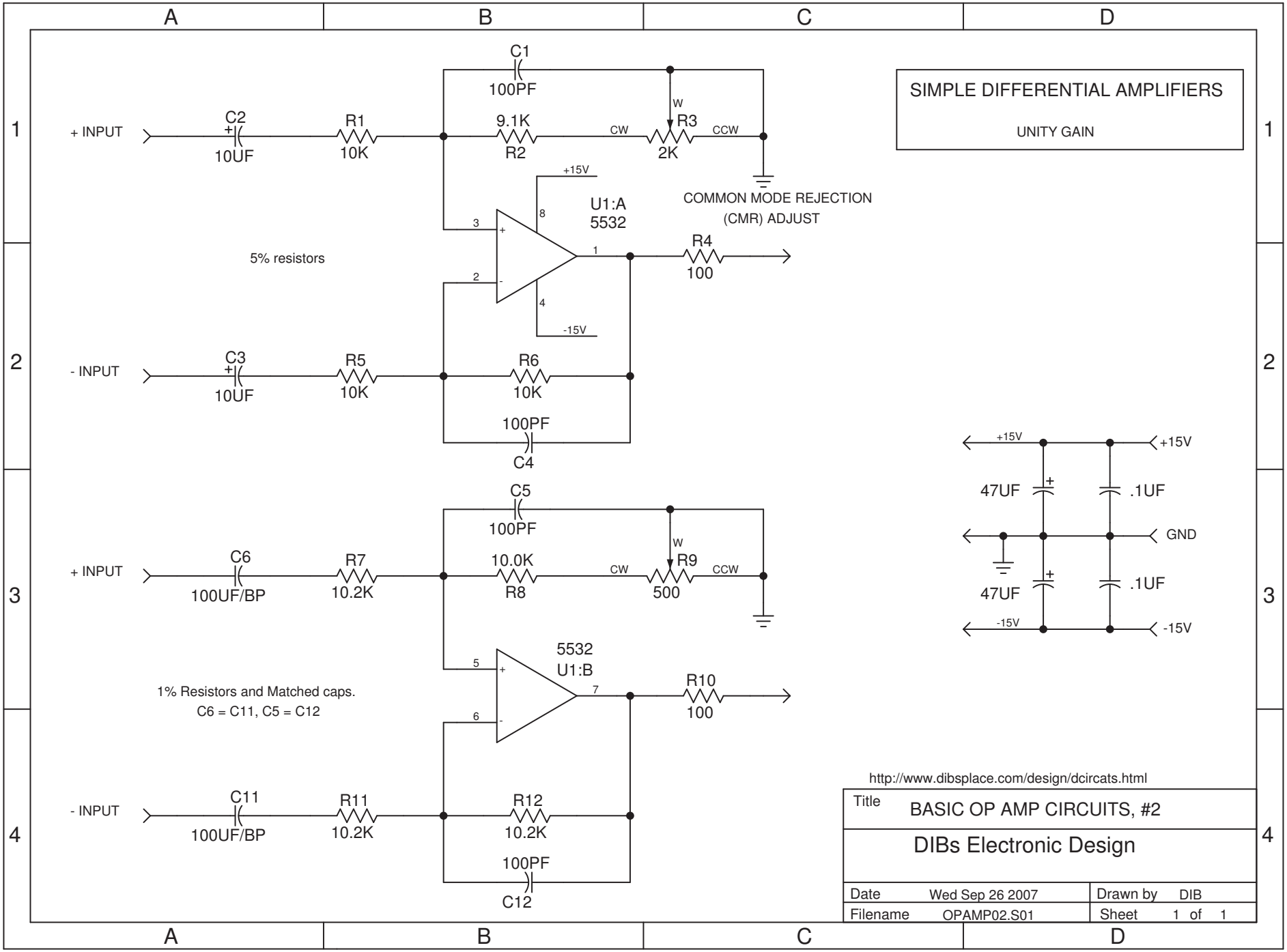
SIMPLE DIFFERENTIAL AMPLIFIERS
UNITY GAIN
+ INPUT
C2
10UF
R1
10K
C1
100PF
9.1K
R2
W
R3
2K
CW
CCW
+15V
U1:A
5532
COMMON MODE REJECTION
(CMR) ADJUST
R4
100
5% resistors
-15V
- INPUT
C3
10UF
R5
10K
R6
10K
100PF
C4
C5
100PF
+ INPUT
C6
100UF/BP
R7
10.2K
10.0K
R8
R9
500
5532
U1:B
R10
100
1% Resistors and Matched caps.
C6 = C11, C5 = C12
- INPUT
C11
100UF/BP
R11
10.2K
R12
10.2K
100PF
C12
+15V
47UF
.1UF
GND
47UF
.1UF
-15V
http://www.dibsplace.com/design/dcircats.html
Title
BASIC OP AMP CIRCUITS, #2
DIBs Electronic Design
Date Wed Sep 26 2007
Drawn by DIB
Filename OPAMP02.S01
Sheet 1 of 1